Clik Clak Large Dome plug and waste

MEC40B

version **01**

FEATURES

Large dome
40mm to suit bath tub
no overflow

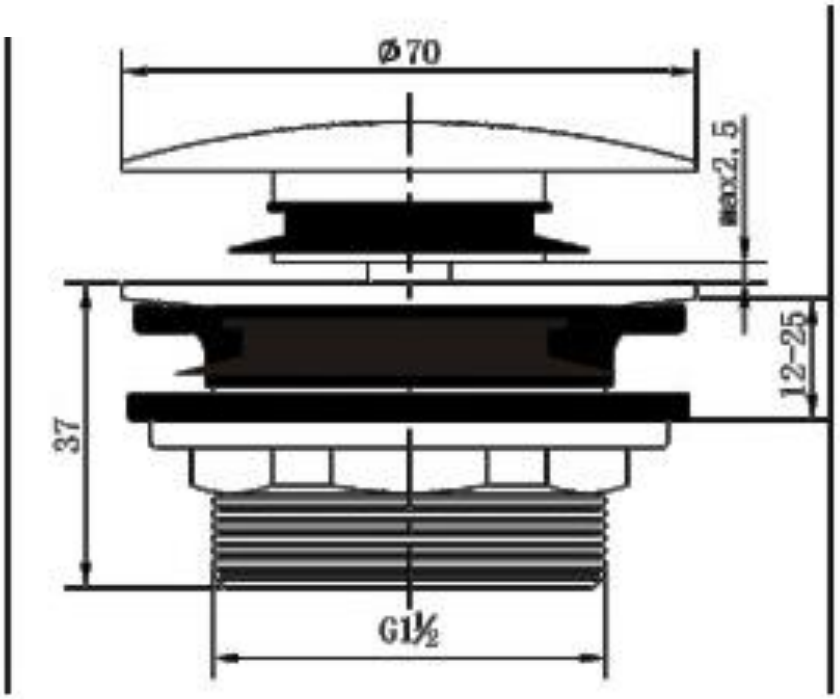

meco international pty ltd.
meco.com.au
for all sales & product inquiries email sales@meco.com.au or call (02) 9618 6999

*all measurements are subject to accepted manufacturing tolerances. please check actual product dimensions prior to installation. meco international pty ltd reserves the right to change specifications at any time without giving prior notification.